PERSPECTIVE VIEW

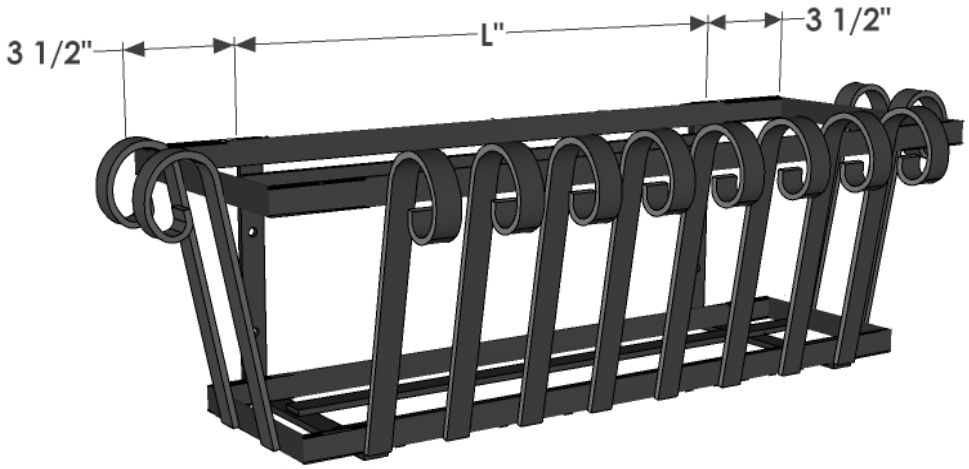

SIZE	L= Actual Dimensions for Liner Fitment
24"	25" Top 22" Bottom
30"	31" Top 28" Bottom
36"	37" Top 34" Bottom
42"	43" Top 40" Bottom
48"	49" Top 46" Bottom
60"	61" Top 58" Bottom
72"	73" Top 70" Bottom

Rail Brackets Size	
1"W	Fits 1" Wide Rail
1.25"W	Fits 1.25" Wide Rail
1.5"W	Fits 1.5" Wide Rail
1.75"W	Fits 1.75" Wide Rail
2"W	Fits 2" Wide Rail

RAILING BRACKET PERSPECTIVE VIEW

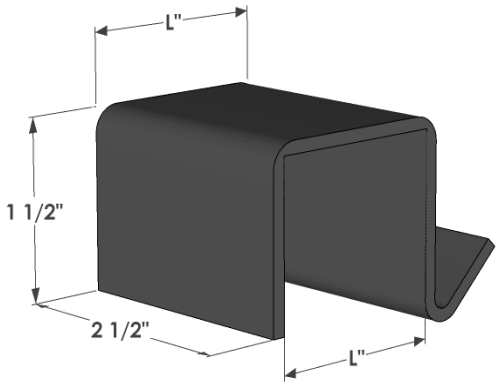

SIDE VIEW

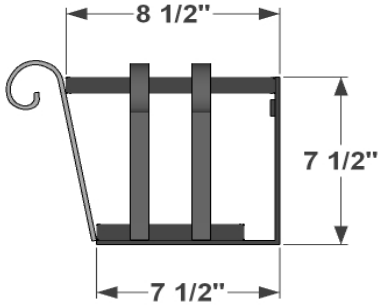

GENERAL NOTES

1. Frame, Back and Bottom supports: 3/4"W x 3/16" Thk Flat Bar
2. Design: 1/2"W x 3/16" Thk Flat Bar
3. Mounting Holes 0.28" dia. (7mm)
4. Overall length +1" to accomodate standard liners +4" scrolls
5. Taper reduces bottom 3"L and 2.5" width
6. Simply place the bracket on top of the railing and the back of the flower planter box will securely sit in the V-shape of the bracket. No hardware is necessary.
7. 60"- 72"windowboxes will come 2 pairs of brackets

windowbox.com
6056 Corte Del Cedro, Carlsbad, CA 92011
service@windowbox.com
888-427-3362

PRODUCT DESCRIPTION	SKU				ORDER NUMBER	CUSTOMER SIGNATURE
Venetian Decora Window w/ Flat Railing Brackets	512B-X-X-413					
DIMENSIONS	COLOR	FINISH	REP:	DB:	DATE	

Carlsbad Manufacturing

©2022 Carlsbad Manufacturing Company. All Rights Reserved.